Rendamax
HEATNOLOGY

TECHNICKÁ DOKUMENTACE

R2000

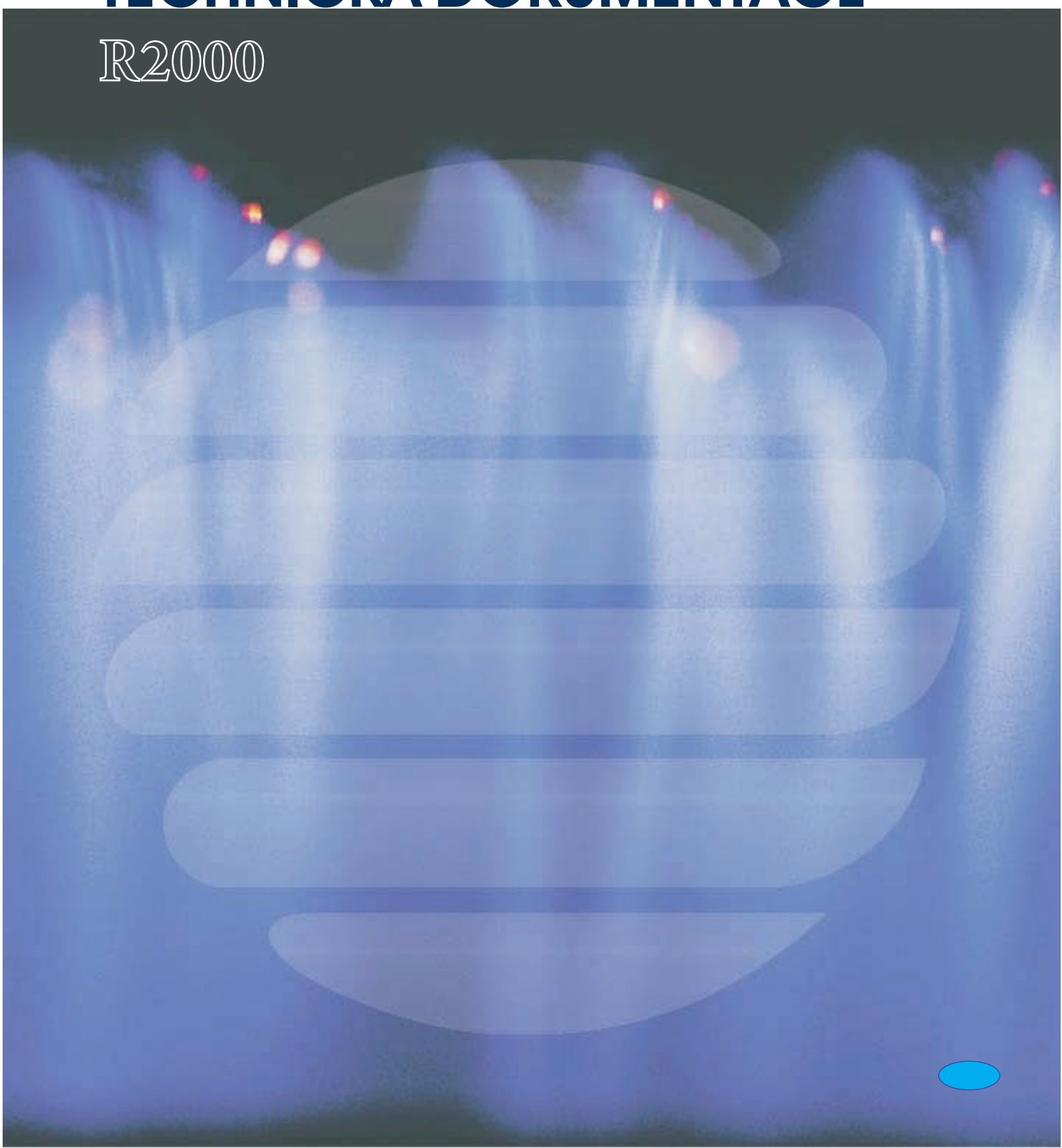

Edition DOC2012, April 2007

We aim to achieve continuous improvement in our products. Therefore, specifications are subject to change without prior notice.

Due to changes the product can deviate from the information specified in this document. Therefore Rendamax B.V. rejects any responsibility for the differences between the product delivered and the information mentioned in this document.

Index

R2000 Technical data R2017-R2048

Type		R2017	R2022	R2028	R2034	R2041	R2048
Nominal heat output Nominal heat input (nett. CV)	kW kW	57,7 65,5	74,6 84,8	95,8 107,7	116,7 131,6	139,1 158,6	162,7 185,5
Gas consumption natural gas H (10,9 kWh/m3) propane	 m^3/h m^3/h	 6,0 2,3	 7,9 2,9	 9,9 3,8	 12,2 4,7	 14,7 5,6	 17,2 6,6
Gas inlet pressure (min.) (max.) propane (max.)	mbar mbar mbar	17 25 50	17 25 50	17 25 50	17 25 50	17 25 50	17 25 50
Water volume Max. working pressure	dm^3 bar	5,6 11	5,9 11	6,2 11	6,5 11	6,9 11	7,3 11
Flue connection D	mm	200	225	250	250	300	300
Gas connection G		¾”	¾”	1”	1”	1”	1”
Water connections W		2”	2”	2”	2”	2”	2”
Pressure relief valve connection relief connection standard setting	 bar	 ½” ½” 3	 ½” ½” 3	 ½” ½” 3	 ¾” ¾” 3	 ¾” ¾” 3	 ¾” ¾” 3
Electrical supply Frequency Fuse	V Hz A	230 50 6	230 50 6	230 50 6	230 50 6	230 50 6	230 50 6
Max. electrical consumption boiler	kW	0,04	0,04	0,04	0,04	0,04	0,04
Dimensions B H K L	 mm mm mm mm	 704 1612 32 820	 783 1612 32 898	 879 1612 32 994	 974 1612 32 1090	 1085 1612 32 1200	 1196 1612 32 1312
Weight, empty, ± 5 %	kg	195	210	225	240	260	280

Table 1a Technical Data

- Heat output measured with: 60 - 80°C
- Gas consumption at: 1013 mbar, 15°C, dry
- Gas specification: 12H, 13P

- Appliance category: B11
- Protection degree: IP20

Changes in specifications and dimensions
The manufacturer reserves the right to change the above mentioned dimensions without prior notice.
Because of manufacturing tolerances, the above mentioned dimensions can vary slightly.

R2000 Technical data R2056-R2122

Type		R2056	R2066	R2077	R2090	R2105	R2122
Nominal heat output Nominal heat input (nett. CV)	kW kW	190,7 217,4	222,1 253,3	261,1 296,2	309,0 348,0	361,0 403,9	425,0 470,7
Gas consumption natural gas H (10,9 kWh/m3) propane	 m^3/h m^3/h	 20,2 7,7	 23,5 8,9	 27,5 10,5	 32,3 12,3	 37,4 14,3	 43,6 16,6
Gas inlet pressure (min.) (max.) propane (max.)	mbar mbar mbar	17 25 50	17 25 50	17 25 50	17 25 50	17 25 50	17 25 50
Water volume Max. working pressure	dm^3 bar	7,7 11	8,3 11	8,9 11	9,6 11	10,5 11	11,4 11
Flue connection D	mm	350	350	400	400	450	450
Gas connection G		1½”	1½”	1½”	1½”	1½”	1½”
Water connections W		DN65 PN16	DN65 PN16	DN65 PN16	DN65 PN16	DN65 PN16	DN65 PN16
Pressure relief valve connection relief connection standard setting	 bar	 1” 1¼” 3	 1” 1¼” 3	 1” 1¼” 3	 1” 1¼” 3	 1¼” 1½” 3	 1¼” 1½” 3
Electrical supply Frequency Fuse	V Hz A	230 50 6	230 50 6	230 50 6	230 50 6	230 50 6	230 50 6
Max. electrical consumption boiler	kW	0,04	0,04	0,04	0,04	0,04	0,04
Dimensions B H K L	 mm mm mm mm	 1323 1612 32 1438	 1482 1612 32 1598	 1657 1632 52 1772	 1863 1632 52 1978	 2101 1652 72 2216	 2371 1652 72 2486
Weight, empty, ± 5 %	kg	305	330	365	400	440	490

Table 1b Technical Data

- Heat output measured with: 60 - 80°C
- Gas consumption at: 1013 mbar, 15°C, dry
- Gas specification: 12H, 13P

- Appliance category: B11
- Protection degree: IP20

Changes in specifications and dimensions
The manufacturer reserves the right to change the above mentioned dimensions without prior notice.
Because of manufacturing tolerances, the above mentioned dimensions can vary slightly.

Dimensions

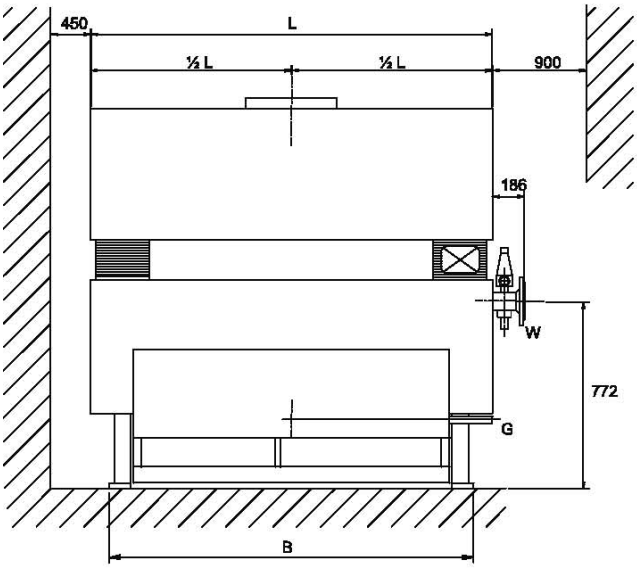

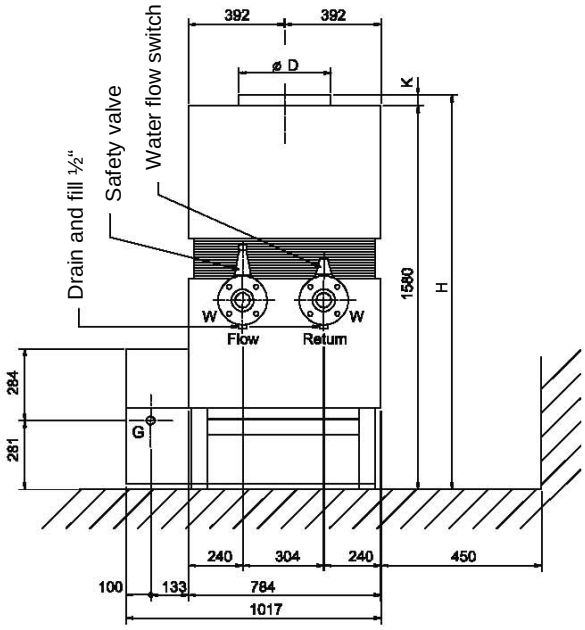

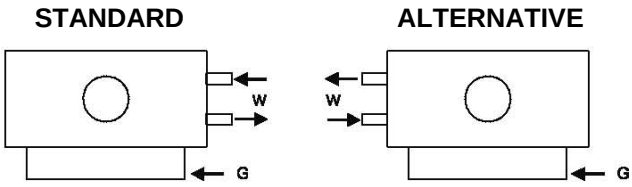

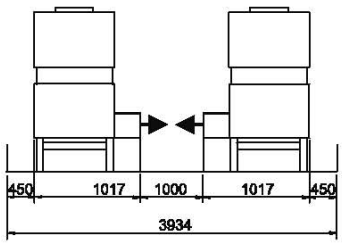

The R2000 unit is also available as a left-handed model.

Top and side clearances are 600 mm MINIMUM.

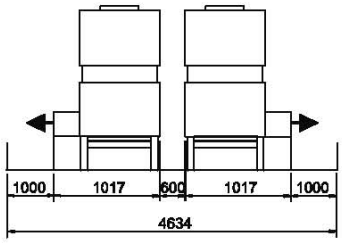

Fig. 1 Dimensions

1 Introduction

1.1 Rendamax

Since its beginning in 1968, Rendamax has built up a strong reputation in industry for the development, production and marketing of gas-fired, high efficiency boilers in the 60 to 1200 kW range.

Through their unique construction, these central heating units are renowned for their:
- high thermal efficiency
- environmental friendliness
- light weight and small dimensions
- durability
- low noise production
- large regulating range
- available with many different options

Continual research and development means that Rendamax remains at the forefront of boiler and water heater technology.

1.2 Supplier

Rendamax boilers are sold by your supplier (see cover).
For advice or more information with regard to our products contact your supplier.

1.3 This manual

This documentation has been produced to aid the following target groups:
- the consulting engineer
- the heating installer
- the service engineer
- the user

Because these target groups require mostly similar information and also specific information, our technical documentation has been integrated to provide these target groups with the necessary general and specific information to install, service and operate this product.
The supplier (see cover) will be able to provide any further or supplemental information.

The following aspects will be explained:
- general description
- technical specifications
- necessary services for system design and unit installation
- example systems
- maintenance instructions

Operating instructions for the user can be found on the unit. See also chapter 7.

1.4 Service

For commissioning and assistance in maintenance matters, please contact your supplier’s service department.
For more details see section cover.

1.5 Reservation

It is the law that the installation be carried out by a competent person. The boiler should be in-stalled in accordance with the British Standards and Codes of Practice referred to in this manual, the Gas Safety (installation & use) Regulations 1994, Building Regulations, Model Water Bye-laws and any Require ments of the Local Gas Supplier, Local Authority, Water and Fire Authorities and I.E.E. Regulations.

Health & Safety at Work Act, 1974
Under Section 6 of the above Act, it is the duty of manufactur ers and suppliers of products for use at work to ensure, so far as it is reasonable practicable, that such products are safe and without risk to health when properly used and to make available to users of such products adequate information about their safe and proper operation. Rendamax boilers should only be used in the manner and purpose for wich they were intended, and in accordance with the recommendations detailed in this manual. Our heaters have been designed, produced and inspected with safety in mind, but there are certain basic precautions, wich should be taken by the user and, in particular attention is drawn to the safety precautions in this manual and to the operating instructions on the heater. It is imperative, therefore, that all persons who make use of our heaters have all the information and instructions they require to ensure that they are fully aware of any hazard, and that they know both the purpose and correct manner of use of our heaters.
The manufacturer can alter its products without any preceding notification and is therefore not obliged to adapt earlier delivered products.

2 Description

2.1 General information

The R2000 series boilers are atmospheric open flued, low thermal capacity gas-fi red boilers.
These high efficiency boilers are designed to provide heating and hot water services for a wide variety of industrial and com mercial premises.

The R2000 series of boilers are available in 12 types:
R2017, R2022, R2028, R2034, R2041, R2048, R2056, R2066, R2077, R2090, R2105, R2122.

The last three digits of the type number indicate the number of burner bars present in the burner assembly.
The load at nett calorific value is approx. 3,5 kW per burner.
All boiler types are fitted with a 9-tube heat exchanger of the 2 pass type.
The use of extruded copper fin pipes in the heat exchanger leads to higher effi ciency.
Thermal radiation losses are minimized by the optimal construction of the combustion chamber in which high-grade insu lation is integrated.
The advanced construction of the R2000 enables swift assem bly and dismantle, which simplifi es maintenance and inspection.

All boilers have full sequence automatic control with overheat cut off, water flow switch, modulating turn down on gas and combustion air (for improved efficiency at varying heat loads) and fault indicators.

The R2000 has an **electronic protection and ignition system,** indicated by **E.**
The electronic PID version controlled by a simple to operate regulator is indicated in the **M version.**
The **weather compensation version** with night reduction is indicated in the **W version.**

Appliance category B11.

CE The R2000 series is CE approved for the following countries:
Great Britain, Belgium, Denmark, France, Ireland, Italy, Spain and Sweden under Product Identification Number 0063AQ6600.

2.2 Main components

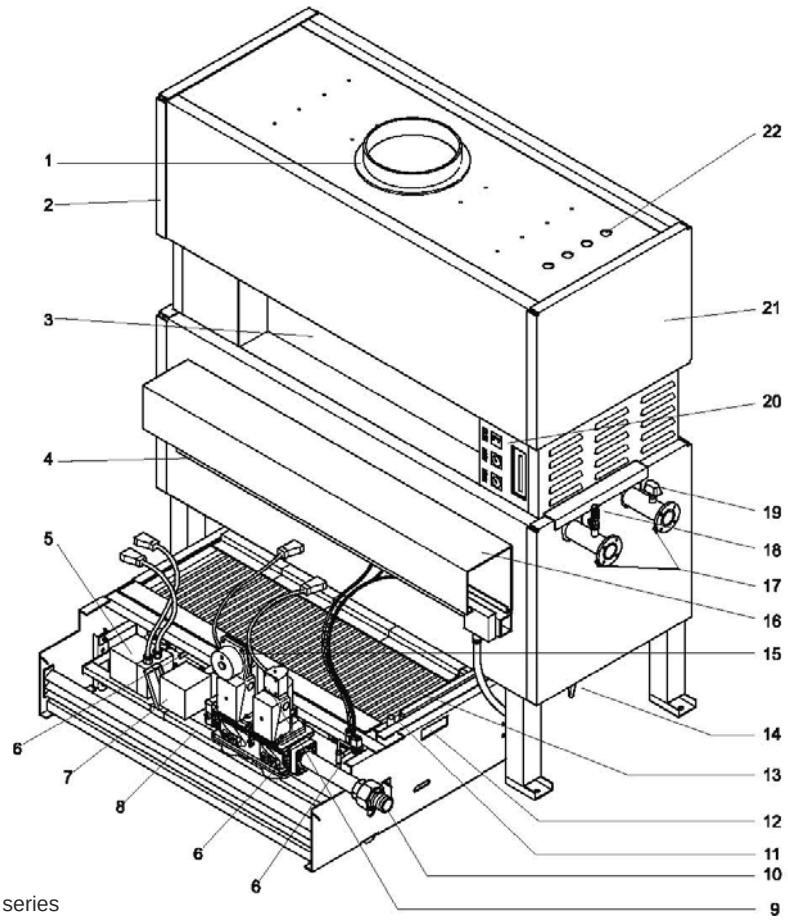

Fig. 2 View of the R2000 series

1 Flue outlet socket
2 Draught diverter
3 Air supply opening
4 Connection box
5 Servomotor (air damper/gas input)
6 Pressure test point
7 Gas modulating valve
8 Air damper
9 Main gas valve
10 Gas connection
11 Electrodes
12 Sight glass
13 Burner bars
14 Quick clamp (securing burner trolley at both sides)
15 Main burner gas governor
16 Gas train cover
17 Filling and drain valve
18 Pressure relief valve
19 Water flow switch
20 Instrumentation panel
21 Inspection panel (electrical wiring & controls)
22 Cable glands

Draught diverter
The R2000 is fi tted with a draught diverter. It is possible to connect the flue outlet connection on the top cover with a standard flue pipe. The inside of the draught diverter is made of aluminium.
The galvanized plate mantle is easily removed without the use of any special tools.

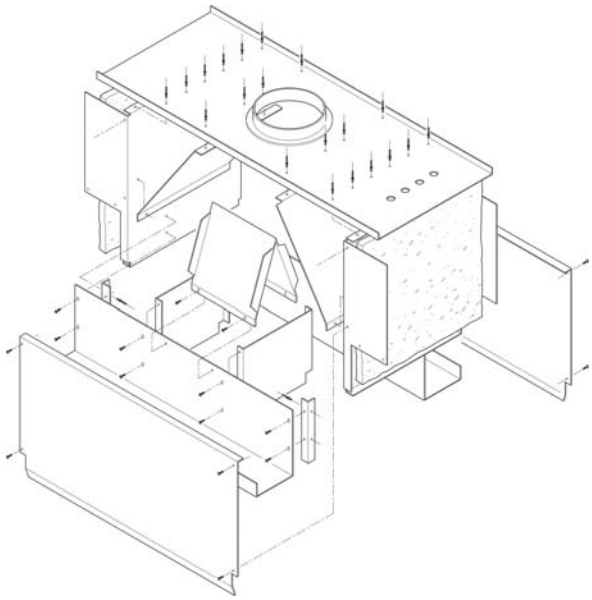

Fig. 3 Draught diverter

Combustion chamber
The chassis consists of two side frames with steel supports. Dura blanket type thermal insulation is sandwiched between the vermiculite refractory blocks and front, rear and side panels of the combustion chamber housing.
These vermiculite refractory blocks are mounted so as to allow freedom of expansion.
The refractory blocks backed with the Dura blanket insulation, form the combustion chamber.

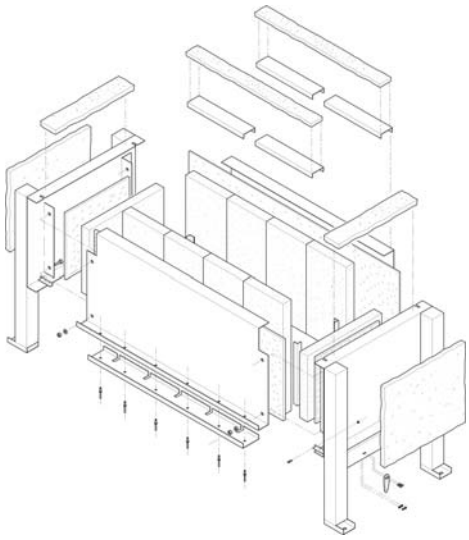

Fig. 4 Combustion chamber

Heat exchanger
The heat exchanger (type 2-pass) is mounted on the chassis. To ensure proper heat transfer of the combustion gases, the copper fin tubes are arranged side by side and expanded laterally into a mounting plate.
The baffles on the copper fin tubes optimize the efficiency of the heat exchanger.
The supply and return pipes, together with the water manifolds, form the heat exchanger.

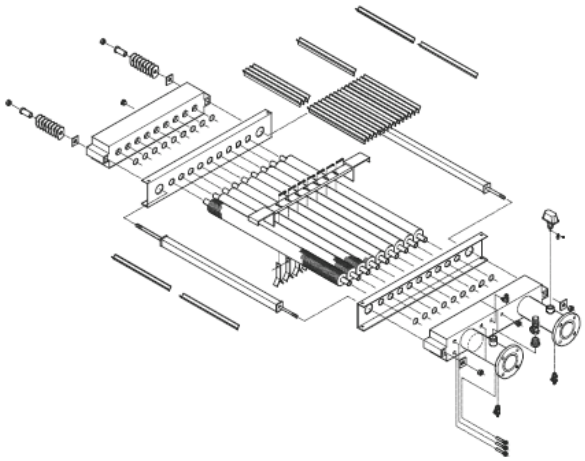

Fig. 5 Heat exchanger

Burner
The burner is mounted under the combustion chamber in the chassis.
The burner bars, mounted in the burner trolley are manufactured from stainless steel.
Each burner bar is supplied by its own injector nozzle mounted on the gas manifold.

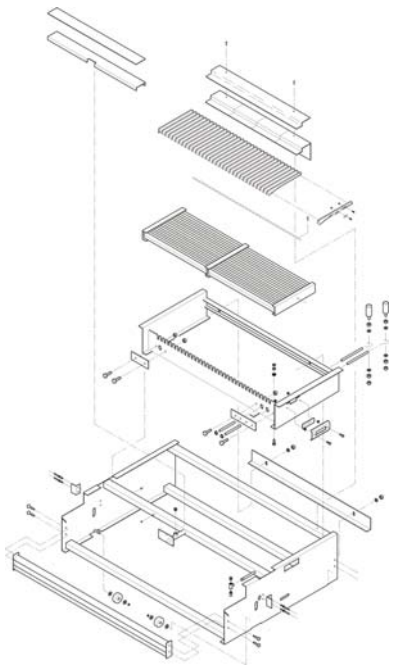

Fig. 6 Burner

Combustion air damper
A combustion air damper is situated underneath the burners.

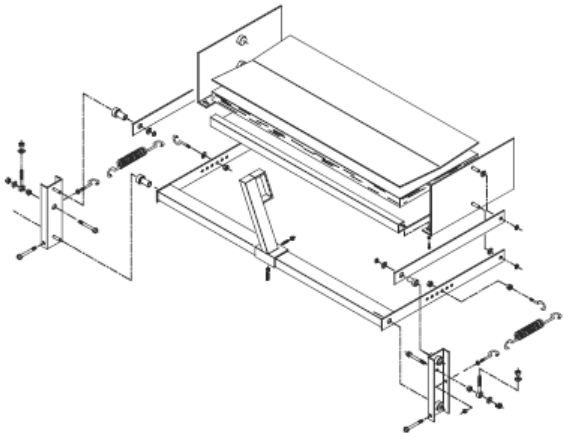

Fig. 7 Combustion air damper

Gas train
The principal components of the gas train are main governor and two main gas valves or combined main governor and main gas valve. The quantity of gas is adjusted in proportion of the quantity of air being supplied by the air damper opening. The pilot flame has a separate pilot line with pilot governor and gas valve.

2.3 Principle of regulation

The flow temperature can be constant or weather compensated. Several boilers can be connected by using cascade switching. With the cascade switching option you can reduce gas and electricity consumption by switching off both boiler and boiler primary pump by the cascade control box.

2.3.1 EM Control option

Electronic Modulating version
This type of boiler control regulation (indicated by the EM control option) uses a built-in PID regulator to maintain a con stant fl ow temperature to within a minimum temperature devia tion of +1 to -1 K. This system allows the user to fi ne-tune the reaction of the boiler to the heating system or application process.
An added bonus with this “EM” control system is that it allows a Building Management system to influence the fl ow temperature using a 0 - 10 VDC control signal.

Boiler temperature controller RWF40

A Process value (actual temperature)
B Set point (temperature)
C Burner enable (not applicable)
D Mod. indicator (decrease fi re rate)
E Mod. indicator (increase fi re rate)
F Two-stage firing (not applicable)
G Limit comparator
H Manual operation

The keys K-L-M-N are used for displaying values and changing parameters in the temperature controllers confi guration.

K Down key (reduce value)
L Up key (increase value)
M Programme key
N Exit key

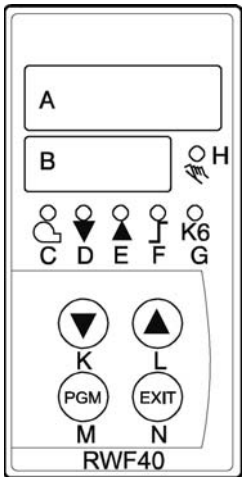

Assignment of levels

All levels can be accessed from the basic display via the **«PGM»** button, as shown in the diagram. The upper actual value display (red) indicates the actual value and the parameter values for the various levels. The setpoint and the parameters are indicated in the lower setpoint display (green).

1. After using **«PGM»** to step through all the parameters of a level, an automatic return occurs after the last parameter has been confirmed.

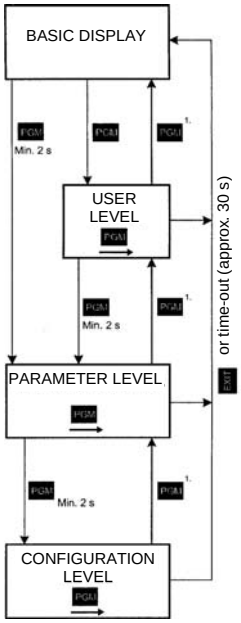

2.3.2 EW Control option

Electronic Modulating version with outside temperature compensation and night-time temperature reduction

This system (indicated by the EW control option) uses the above mentioned PID regulator to regulate the boiler. The “EW” control system maintains the advantages of the “EM” type boiler and adds to it the possibility of automatically changing the flow temperature according to the outside temperature and the required heating curve. The unit’s built-in week-clock also means that a night-time and weekend temperature reduction is possible with a “EW” control system.

Weather-compensated setpoint shift

The RWF40 can be configured in such a way that, if a Ni1000 outside sensor (e.g. QAC22) is connected, a weather-compensated setpoint shift is implemented. The minimum and maximum setpoint values can be set by the lower setpoint limit **SPL** and the upper setpoint limit **SPH. Parameter P** can be used to apply a parallel displacement to the heating curve.

☞ Each RWF40 must have its own separate outside sensor connected (no parallel connection)!

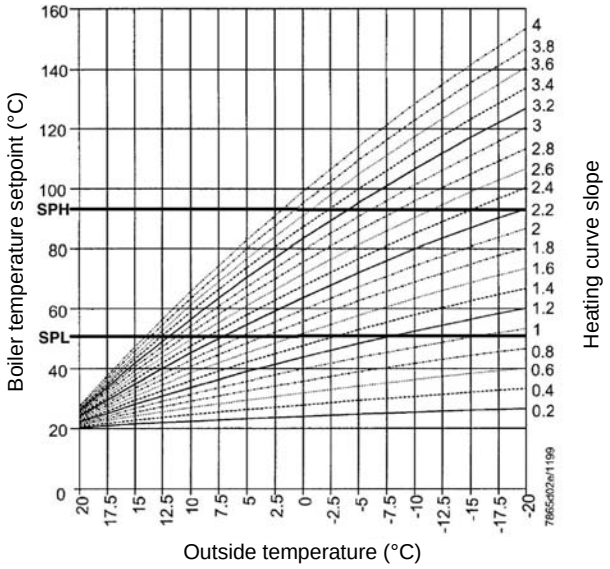

Fig. 8 Parallel displacement of the heating curve

Heating curve slope

Slope H of the heating curve can be used to adjust the set- point in response to the outside temperature, as shown in the diagram. The common origin of the heating curves is set at (20°C/20°C). The effective range of the weather-adjusted setpoint is restricted by the setpoint limits **SPH** and **SPL.**

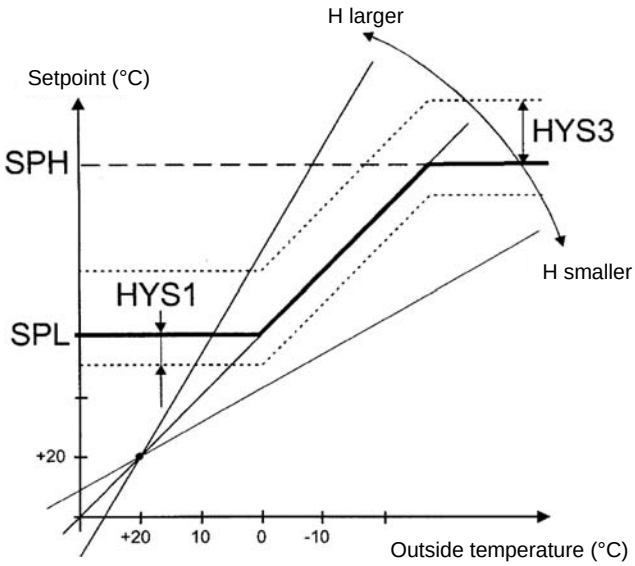

Fig. 9 Heating curve slope

HYS1 is the switch-on point for the burner, and **HYS3** is the switch-off point.
As already described, they act with the set shift relative to the weather-controlled setpoint.

Process data

Parameter	Display	Value range	Factory setting
Setpoint 1 [1]	**SP1**	SPL-SPH	80
Setpoint 2 (option) [1]	**SP2**	SPL-SPH	0
Digital setpoint shift (option) [1]	**dSP**	SPL-SPH	0
Outside temperature (option) [1]	**tA**	**C111** Inputs	-
Predefinition of external setpoint [1]	**SP.E**	SPL-SPH	-

Parameter level

Parameter	Display	Value range	Factory setting	Advise RMX
Limit value of limit comparator [1]	**AL**	-1999…+9999 digit	0	6
Switching differential for limit comparator [1]	**HYSt**	0…999.9 digit	1,5	1,5
Proportional band [1]	**Pb.1**	0.1…999.9 digit	10	10
Derivative time	**dt**	0…9999	80	40
Integral action time	**rt**	0…9999	350	30
Contact spacing [1]	**db**	0.0…999.9 digit	1	
Actuator running time	**tt**	10…3000 S	15 S	33-60
Switch-on threshold burner/stage II [1]	**H Y S 1**	0.0…-199.9 digit	-3	-3
Switch-off level stage II [1]	**H Y S 2**	0.0… HYS3 digit	3	
Upper switch-off threshold [1]	**H Y S 3**	0.0…999.9 digit	3	3
Response threshold	**q**	0.0…999.9	0	
Heating curve slope	**H**	0.0…4.0	2	2
Parallel displacement [1]	**P**	-90…+90	0	

Configuration level

Parameter	Display	Factory setting
Analog input 1, 2 and 3; setpoint changeover / shift	**C111**	9930
Limit comparator; controller type; setpoint 1; locking	**C112**	5010
Unit address; decimal place / unit signal for out-of-range	**C113**	0110
Measurement range start analog input 1 [1]	**SCL**	0
Measurement range analog input 1 [1]	**SCH**	100
Measurement range analog input 2 [1]	**SCL2**	0
Measurement range analog input 2 [1]	**SCH2**	100
Lower setpoint limit [1]	**SPL**	44
Upper setpoint limit [1]	**SPH**	90
Actual value correction, analog input 1 [1]	**OFF1**	0
Actual value correction, analog input 2 [1]	**OFF2**	0
Actual value correction, analog input 3 [1]	**OFF3**	0
Filter time constant for digital filter, analog input [1]	**dF1**	1

[1]) These parameters are affected by the setting for the decimal place. The boiler temperature controller is factory preset, K6 contact can be used as a limit thermostat. Weather compensation and Q64-Q65 are activated. not wired in.

2.4 Boiler protection

The R2000 is protected by the following systems:

Water flow switch
The water flow switch is installed in the flow manifold and monitors continuously the water flow.
If the water flow falls below a preset level, the burner is shut down and go to lock-out.
The water flow switch is factory set and should not be adjusted.

High limit thermostat
In the event of failure of the control thermostat, a preset high limit thermostat will shut down the burner and go to lock-out.

Pressure relief valve
The maximum operating pressure of the R2000 boiler is 11 bar. The standard safety valve supplied is set to 3 bar.
If a different pressure setting is required this should be specified and will be set at the factory.

Gas burner control
The burner control unit provide control and supervision of the atmospheric burner.
The sequence controller is coupled to the spindle of the control circuit and to the flame supervision unit displaying the status, the symbol appearing above the reading mark indicates the firing sequence or lock-out condition. The pilot flame is supervised by ionisation current detection.

3 Safety

Installation requirements
Please read these requirements before commencing installation.

The product has to be installed by a recognized installer fully according to the current national and local demands, norms and standards. The installation procedure should only be used for heating systems with a maximum water temperature of 95°C. We emphasize that you should always give priority to the above mentioned standards and regulations and that the installation regulations should be considered as an addition to these standards and regulations.

Explanation of the icons used in this manual

☞ Instruction of extreme importance in order to guarantee proper functioning of the boiler.

⚠ Not following the operation procedures can cause serious damage to the boiler, personal injuries or environmental pollution.

⚠ Electric shock hazard.

Useful information.

Maintenance
Work on the electrical installation should only be carried out by approved technicians and in accordance with the electro technic regulations.

Work on the gas and hydraulic systems should only be carried out by approved technicians and in accordance with the safety regulations for gas installations.

Keep unauthorized people away from the installation. Do not place any objects on the boiler. Keep away from the hot water connections in order to prevent burns.

Always disconnect the boiler from the electric mains and close the gas service cock in the gas supply pipe before commencing maintenance and servicing operations.

Check the system for leaks afterwards.

In addition to the information in this documentation, always follow the standard safety regulations to prevent accidents.
Cover panels should only be removed for maintenance and servicing tasks. Replace all panels after completing these maintenance and servicing tasks.

Safety precautions
The installation should never be switched on with panels removed or when boiler protection devices are not operational.

Instruction and warning stickers
Never remove or cover any of the instruction and warning stickers. They should always be legible throughout the life span of the boiler.
Immediately replace any damaged or illegible stickers.

Modification
Modification of the installation should only be carried out after obtaining prior written permission from the manufacturer.

Danger of explosion
Follow the health and safety regulations for working in hazardous areas when working in the boiler room.

Installation
The boiler should be installed by a recognized installer in accordance with current regulations and the regulations of the local electric companies. Make sure that you follow all safety instructions properly.

Operation
In case of gas leakage, switch off the boiler and close the gas service cock. Open doors and windows, and notify the proper authorities. Follow the instructions in the manual when you use the boiler again.

Technical specifications
Do not exceed the specifications as layed down in the installation and maintenance instructions.

4 Delivery and transport

4.1 Delivery

Before delivery, the R2000 boiler is fully assembled and tested in the factory. The R2000 is mounted on a pallet and covered in a “heat-shrink” protective wrapper.

Check for damage after removing the boiler’s protective covering.
Check whether the boiler conforms to the order requirements.
Check whether the circuit diagram and gas-train diagram number is in accordance with the offer, order confirmation and the data on the boiler’s data number plate.

4.2 Unit protective packaging

The boiler is mounted on a wooden pallet. For transportation the boiler is covered in a “heatshrink” protective covering. The panel-work is also covered in a protective polyethylene layer.
Before final installation in the boiler room the boiler must be removed from the pallet and all protective coverings removed.
The protective coverings should be disposed of in a environmentally friendly way.
Contact your local authority.

4.3 Transport

Refer to the technical specifications on weight and dimensions when transporting the boiler.

WARNING:
- Incorrect moving or lifting of the boiler may cause damage
- Remove the protective covering after transport and installation in the boiler room.

Pallet cart and/or forklift truck
When moving the boiler with a pallet cart or forklift truck, the forks should be placed at a front of the boiler

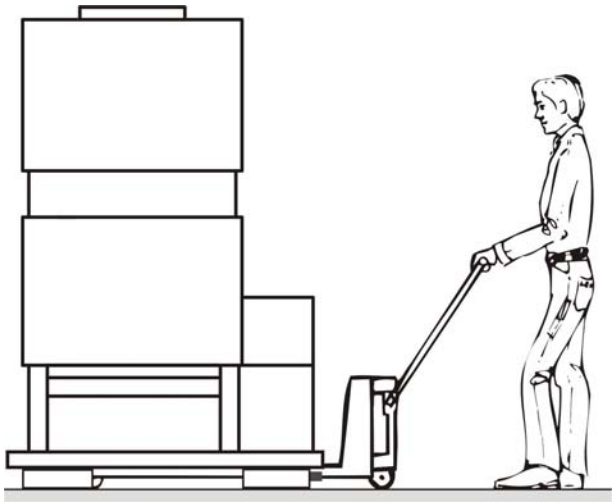

Fig. 10 Moving

Using a crane

- Never swing the load over bystanders.
- Always use special lifting harnesses which should be placed on the boiler.
- Make sure that during lifting the harness does not damage the draught diverter.

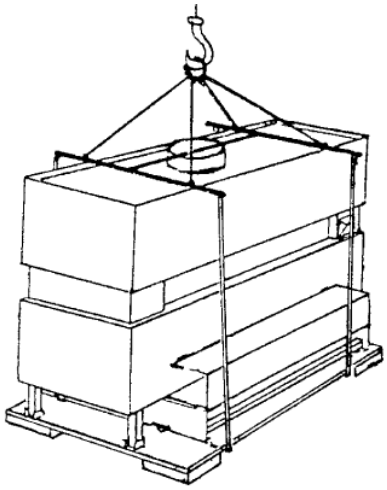

Fig. 11 Lifting

5 Installation

5.1 Boiler room

Installation of the R2000 should only be carried out by a recognized installer in accordance with the current national and local demands, norms and standards.

5.1.1 Siting

Install the boiler as close to the chimney as possible. A plinth base is not required.

To maintain ease of access and therefore ease of maintenance refer to clearances in figure 1.

If these dimensions are not met, maintenance operations could be seriously inhibited.

5.1.2 Boiler room ventilation

The product has to be installed by a recognized installer fully according to the current national and local demands, norms and standards.

5.2 Unit connections

5.2.1 Gas supply

The product has to be installed by a recognized installer fully according to the current national and local demands, norms and standards (see supplement).
Gas connection can be found at the side of the boiler.

Always mount a gas fi lter.
The main gas service cock and gas filter should be supplied by a qualified heating engineer.
Install the main gas service cock and the gas filter as close to the boiler as possible.

The R2000 series of boilers are suitable for connection to a 25 mbar gas network.

The minimum supply pressure **must never fall below 18 mbar.** With a lower gas pressure it is possible that the boiler will not run at 100% capacity. At the same time the boiler can be more prone to failures. Adjust the burner pressure with a supply pressure of 20 mbar before the boiler.

5.2.2 Electrical supply

The product has to be installed by a recognized installer fully according to the current national and local demands, norms and standards.
The boiler is wired according to the circuit diagram which is supplied with the boiler.
The boiler must be protected by a 6 amp fuse.

⚠ The boiler must have electrical supply voltage of 230 VAC.
Do not cross connect 'live' and "neutral"!
"Live" is connected to the terminal marked with "L" (brown), and "neutral" is connected to the terminal marked with "N" (blue). "Earth" is connected to the terminal "W" (yellow/green).

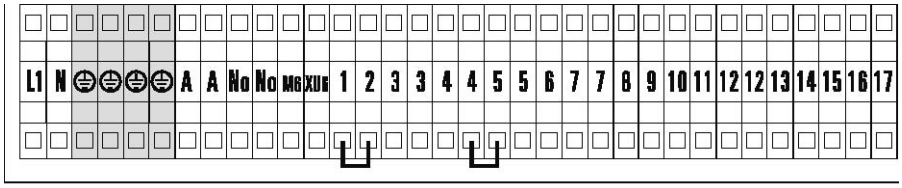

Fig. 12 Electrical terminal block

External control

It is possible to externally control the unit.
The following terminals on the terminal block have the following functions:

1	common
1 - 2*	up signal
1 - 3	down signal
4 - 5*	enable
6 - No	cascade signal (240 V)
M6 - XU6	0 - 10 VDC control signal (only available with EM/EW control option)
32 - No	external main gas valve
A - No	alarm signal (240 V)

*) remove jumper

☞ ***Pump switching***

The boiler's circulation pump must be in operation before the boiler is switched on. When the boiler is switched off, the circulation pump should continue to run for several minutes in order to reduce the amount of heat present in the boiler (minimun 3 minutes). If the pump is switched off too soon, the water temperature can rise above the maximum water temperature, as a result of which the high limit thermostat will cause the boiler to **fall into "Lock-out".** In this case no general alarm signal is indicated.

5.2.3 Hydraulic connections

The product has to be installed by a recognized installer fully according to the current national and local demands, norms and standards. The supply and return pipes are found on the rear side of the boiler.
As standard all boiler types are fitted with a boiler pressure relief valve, set to 3 bar.
If requested the manufacturer can also install relief valves which are set to between 3 and 6 bar.
Heavy supply and return pipes should be supported from underneath.

5.2.4 Flues

Flue dimensions

This section should be used for guidance only. A flue specialist should be contacted to rate a flue design. You can use the following flue dimensions to assist in flueing:

Type	Q flue m^3/h	Chimney diameter mm
R2017	230	200
R2022	298	225
R2028	376	250
R2034	454	250
R2041	551	300
R2048	645	300
R2056	749	350
R2066	885	350
R2077	1013	400
R2090	1206	400
R2105	1407	450
R2122	1516	450

Table 2 Flue gas volumes

Heat input:	100%
Flow temperature:	90°C
Return temperature:	70°C
Flue gas temperature:	130°C
CO^2:	5,5%

Average fl ue pipe resistance coeffi cients of various flue pipes. See also manufacturers information.	
bend 90° (R/D= 1,0)	$\zeta = 0,5$
bend 90° (right angle)	$\zeta = 1,3$
bend 45°	$\zeta = 0,5$
T-piece	$\zeta = 2,0$
outlet	$\zeta = 1,5$

Table 3 Average flue pipe resistance coeffi cients

Flue condensation

Flue gases transfer heat when they pass through the chimney. If the flue gas temperature falls below dew-point, condensation will occur in the flue. Under normal conditions condensation will not occur. To prevent condensation the flue should be insulated. More atmospheric boilers can be connected to a single flue.

Fan diluted flue system

A fan diluted flue system can be used with this tye of boiler. The principle is to mix the products of combustion with fresh air drawn from the outside atmosphere to reduce the CO_2 value below 1% and so permit the flue discharge to be located at low level. Duct diameters are selected to give a duct exit velocity less than 8 m/sec.

5.3 Water quality

Corrosive elements in certain additives can attack the system, resulting in leakage; deposits of undesirable sediments can lead to damage to the boiler heat exchanger.
For water hardness, a distinction must be made between:

a Temporary hardness
This is also referred to as carbonate hardness.
Deposits are formed at higher temperatures and are easy to remove.

b Permanent hardness
Minerals (for example, calcium sulphate) dissolved in the water can be deposited as a function of very high surface temperatures.

In the United Kingdom, water hardness is expressed in mg/litre (ppm) and is given the following divisions:

Very soft	less than 50 ppm
Soft	approx. 50 - 160 ppm
Moderately hard	approx. 160 - 250 ppm
Hard and very hard	over 250 ppm.

The system must contain soft to moderately hard water with a water hardness not exceeding 250 ppm with a supply temperature of 80°C and ΔT = 20 K.

During the construction of larger installations, one of the appliances may be operational.
New circuits may be regularly switched in, which must occur together with the addition of fresh water.
In addition, it can happen that, because of leakage, some circuits must be disconnected, repaired and re-filled. In these circumstances the only appliance in operation often functions at full capacity and the chance of boiler scale formation is present. For this reason the make-up water must be softened.
To ensure proper functioning of the appliance and the system, the use of water softeners is recommended.

Large stationary air bubbles with widely different compositions can form at “dead points" in the system (in addition to oxygen and nitrogen, hydrogen and methane have also been detected).
Oxygen promotes corrosion. Corrosion products, together with other pollutants, form a sludge deposit (magnetite) which causes pitting under the influence of oxygen.

The use of an air separator with an automatic de-aerator is strongly recommended. This should preferably be fitted in a horizontal section of the return pipe to the pump. If a vertical distributor is employed, the air separator should be fitted above the distributor.

To reduce the effects of unnecessary wear and blockages resulting from any pollution present we advise the use of a filter system with a mesh opening of 100 microns. Always fit this in the return pipe of the secondary part of the system. In order to guarantee a well functioning system and a long life, any suspended and corrosion producing particles must be removed with the aid of a well chosen and fitted filter system. The analysis of system water and the cleaning of filters must form part of the periodic inspection procedure.

If there is an intention to add chemicals (such as inhibitors) to the water, contact must be made with your supplier. They can provide advice on filter systems and other requirements.
(Water analysis forms can be obtained from your supplier).

As the heat exchanger only has a small volume, minimum water flow is absolutely necessary.
This water flow is secured by the water flow switch.

There is a relationship between the maximum water flow temperature, the system pressure and the water volume which flows through the boiler per unit time at a specified boiler load.
In case of high water flow temperature, low water velocity in the heat exchanger and low pressure, steam forming may occur. Figure 14 shows the relationship between water volume and differential pressure over the heat exchanger.

5.4 Hydraulic system

System pressure
By system pressure we mean the water pressure measured at the heat exchanger in cold condition. With a correctly sized expansion system the system pressure will not change much under variable temperature conditions.

5.4.1 Flow and resistance

The next figure shows an example of a hydraulic system.

System pressure is calculated using the following formula:

p = p exp. + H - Rk

p = water flow temperature
p exp. = pressure expansion vessel
H = pump head
Rk = pressure loss boiler

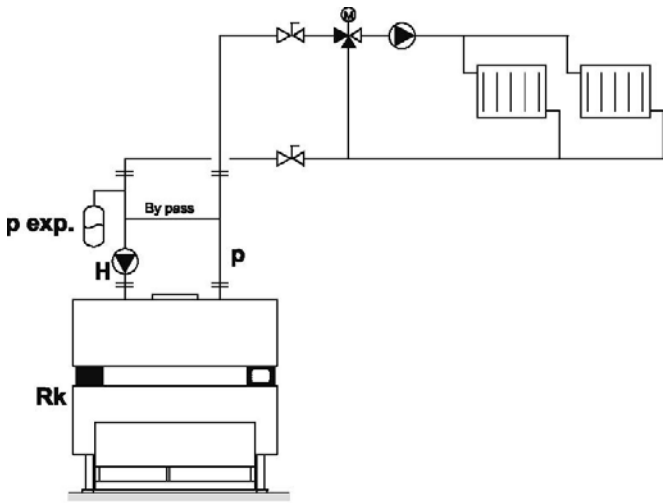

Fig. 13 Example of a hydraulic system

Minimum and maximum water volume per hour
A too low flow rate through the copper fin tubes can lead to cavitation. Also a too high flow rate can cause erosion. To protect the heat exchanger from these two extremes, the flow rate (Q) should be set using the following table.

Type	Water flow rate versus pressure drop					
	minimum flow rate		nominal flow rate		maximum flow rate	
	Q m^3/h	pressure drop mbar	Q m^3/h	pressure drop mbar	Q m^3/h	pressure drop mbar
R2017	5	22	6	30	9	60
R2022	5	24	6,5	35	11	88
R2028	5	26	7	40	14	145
R2034	6	36	8	55	19	270
R2041	7	44	9	70	23	400
R2048	8	58	10	85	24	440
R2056	9	66	11	110	24	460
R2066	10	92	12	130	24	480
R2077	12	135	14	180	24	490
R2090	13	150	15	220	24	500
R2105	14	190	16	250	24	520
R2122	16	260	18	310	24	540

Table 4 Water flow rate versus pressure drop

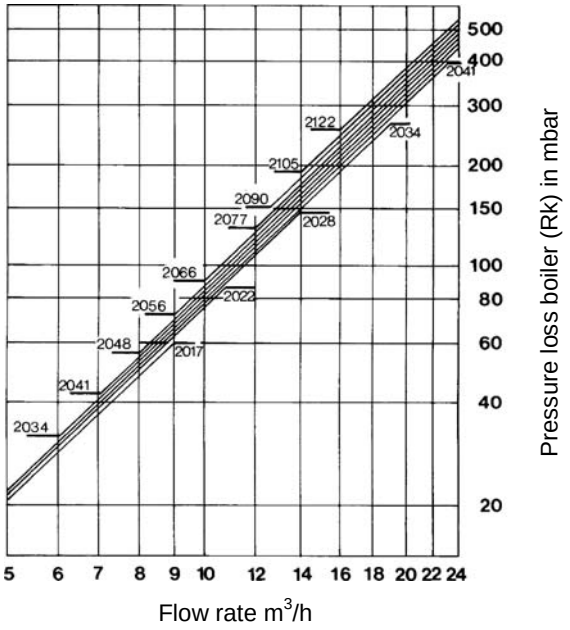

Fig. 14 Water volume

Positioning the pump and expansion vessel
We advise that the pump should be mounted in the return pipe in the following order:
expansion vessel, pump, boiler.
If you mount the pump in the flow pipe, the lifespan of the pump will be reduced.
Always connect the expansion vessel to the suction side of the boiler pump.
If the boiler is installed on the roof, you should take into account the maximum permitted pressure in radiators on the ground floor and that the flow and return connections are taken upwards from the boiler before descending to ensure the heat exchanger is filled with water.

Pump switching
It is necessary to electrically switch the boiler in such a manner that it will never operate before the installation and boiler pump is running. It is essential that an overrun switch is used to allow the pump to operate for **at least 3 minutes** after the burnes have turned off.

The effect of flow velocity of the installation on boiler water temperature
ALWAYS MOUNT SECONDARY MOTORIZED OR MIXING VALVES IN THE SECONDARY WATER CIRCUIT WITH AN OPENING TIME OF AT LEAST 120 SECONDS!

Fast acting mixing valves in the secondary water circuit may give the boiler regulator insufficient time to make proper corrections.
This may lead to an unacceptable high temperature, as a result of which the high limit thermostat may lock-out the boiler.

Such a problem may also occur if all flow governors close simultaneously. The flow governors should therefore close one after the other.
The sudden disconnection of an important warm air heating unit may cause the same problem.
If a large fan can be switched off immediately, you should consider switching off the boilers first (temporarily if necessary), and subsequently the fan using a time relay.
When the flow governors are opened for night time temperature reduction for example, it is essential that **the return water temperature of the heat exchanger does not fall below 40°C**
(as condensation in the combustion chamber may occur).

If an installation is to be optimized, the primary water circuit consisting of boilers, boiler pumps and open header should be started before the system is switched on.
Open the groups subsequently one after the other by using a return water temperature regulator for example, adjusted to 40°C. Switch on the secondary pumps one after the other.

The primary circuit must have a low water volume. This enables faster heating and reduces the condensing time of the boiler.

The recommended maximum volume of the primary circuit per 100 kW installed boiler capacity is 200 litres. When the installation is switched off, the boilers must be switched off first. After approximately 3 minutes the boiler pumps and the heating groups can be switched off.

5.4.2 Examples hydraulic system

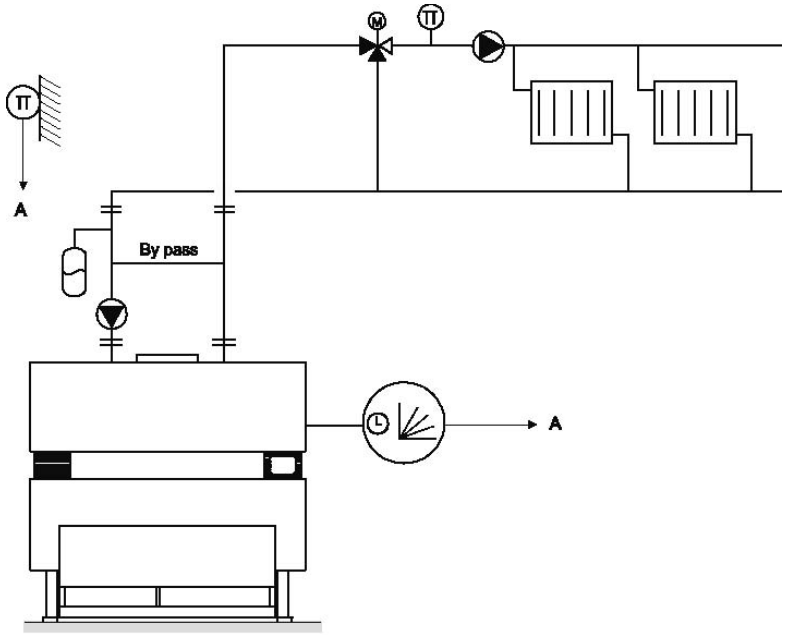

Fig. 15 R2000 unit with outside temperature compensation

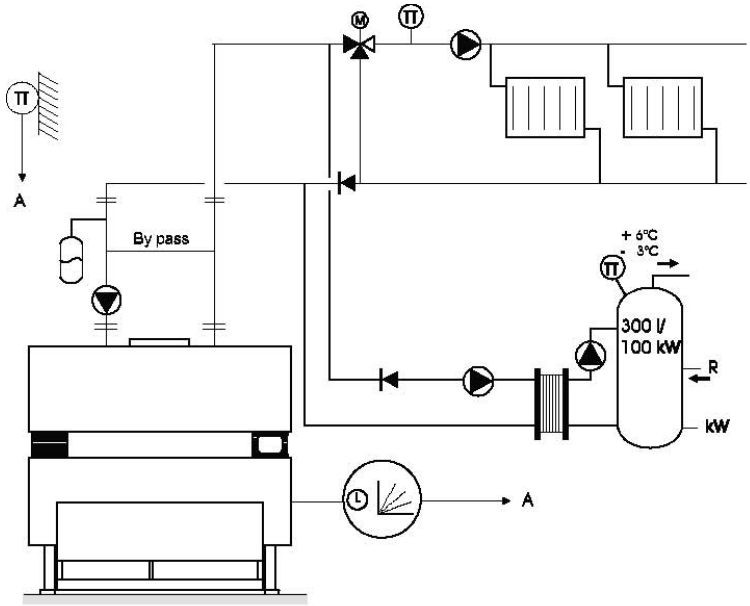

Fig. 16 R2000 unit with outside temperature compensation (heating zone regulation and hot water priority switching is an option)

Boiler model	By pass size
R2017 - R2022 R2028 - R2041 R2041 - R2090 R2105 - R2122	1“ 1½“ 2“ 2½“

Table 5 By pass size

Open vent and cold feed

An open vent pipe must be fitted in open systems not more than one meter along the flow pipe and must rise continuously by the shortest route to the venting point without valving and with frost protection where necessary.

Vent pipes and cold feed pipes should be sized as follows.

Rated output (kW)	Open vent	Cold feed
Below 60 60 - 150 150 - 300 300 - 600 Above 600	25 mm (1“) 32 mm (1¼“) 38 mm 1½“) 50 mm (2“) 63 mm 2½“)	19 mm (¾“) 25 mm (1“) 32 mm (1¼“) 38 mm 1½“) 59 mm (2“)

Table 6 Vent pipes and cold feed pipes size

See Technical data table for individual boiler outputs.

Sealed systems

Normal operating pressure with nominal flow rate.

Flow temperature °C	Minimum operating pressure bar
80 90	> 1,5 > 2,0

Table 7 Minimum operating pressures at nominal fl ow rate

Standard pressure release setting 3 bar.

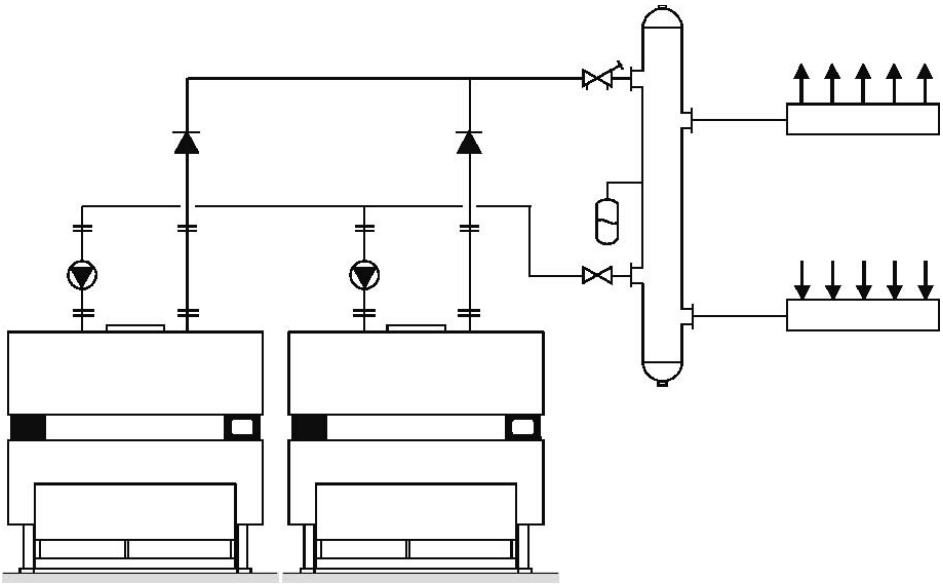

Fig. 17 R2000 units with constant flow temperature and cascade switching with a zero loss header

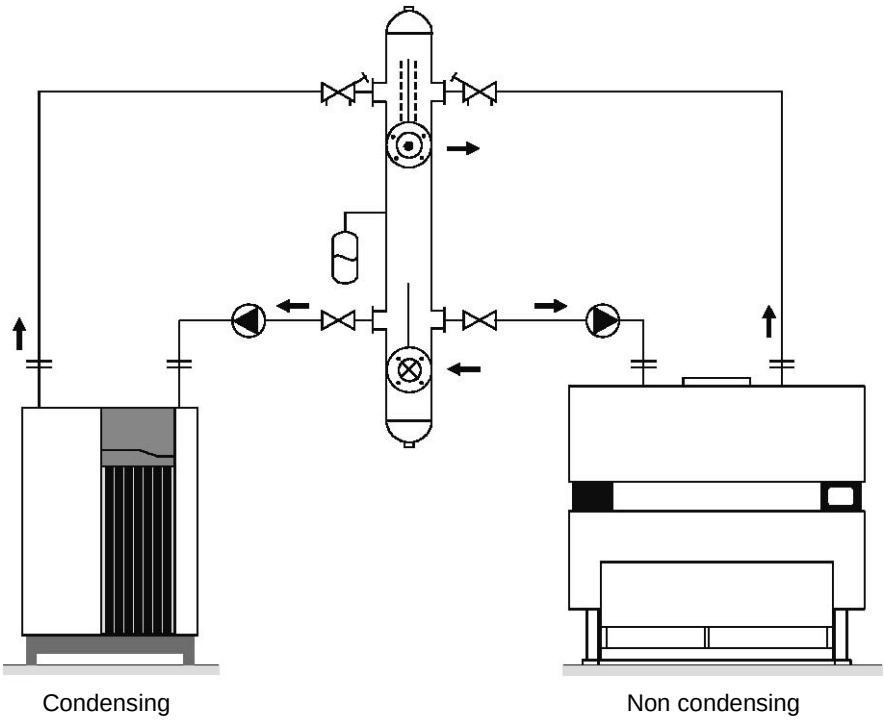

Fig. 18 Condensing/non condensing unit cascade switching and a zero loss header

These hydraulic systems are examples only and should not be used without specialist advice.
Low velocity vertical headers, for single and multiple boiler circuits are as option direct available.

6 Commissioning

6.1 General

COMMISSIONING OF THE BOILER MUST BE CARRIED OUT BY PROPERLY QUALIFIED AND AUTHORISED PERSONNEL. OTHERWISE, THE GUARANTY WILL BECOME VOID.

Never deviate from the instructions in this manual.

Flushing the system
To prevent damage from rust, sealing compounds, sand, metal particles etc., the system must be flushed thoroughly, before the system is switched on. Also ensure that the heat exchanger is free of any such deposits after flushing the system.

Water heating system
- fill the system up to the standard set pressure
- bleeding the system
- switch on all pumps and check for correct direction of rotation
- close the stop-valves in the secondary groups

⚠ ***Electrical connection***
- check the boiler electrical connection
- switch on the boiler with the ON/OFF switch
- adjust the temperature regulator to the desired flow water temperature

Gas connection
- open the gas service cocks
- bleed the gas pipe
  NB: Insure adequate ventilation during bleeding
- connect the measuring equipment to check:
  * static pressure
  * burner pressure
  * boiler ionisation current

Adjusting the burner pressure
The burner pressure must be adjusted when the boiler has been running for 20 minutes at high load (state of equilibrium).

Natural gas H (G20) Gas service pressure 20 mbar / Nozzle diameter 1,8 mm					
minimum load (20 %)					
Type	**Burner pressure (mbar)**	**Pilot pressure (mbar)**	**Air damper opening closed (mm)**	**Burner pressure 40% ET out/in (mbar)**	**Cascade out (mbar)**
R2017	0,9	3,5	4	1,3/2	1,5/7,5
R2022	0,9	3,5	4	1,3/2	1,5/7,5
R2028	0,9	3,5	4	1,3/2	1,5/7,5
R2034	0,9	3,5	4	1,3/2	1,5/7,5
R2041	0,9	3,5	4	1,3/2	1,5/7,5
R2048	0,9	3,5	4	1,3/2	1,5/7,5
R2056	0,8	3,0	4	1,3/2	1,5/7,5
R2066	0,8	3,0	4	1,3/2	1,5/7,5
R2077	0,8	3,0	4	1,3/2	1,5/7,5
R2090	0,8	3,0	4	1,3/2	1,5/7,5
R2105	0,8	3,0	4	1,3/2	1,5/7,5
R2122	0,8	3,0	4	1,3/2	1,5/7,5
full load (100 %)					
Type	**Burner pressure (mbar)**	**Pilot pressure (mbar)**	**Air damper opening closed (mm)**	**Burner pressure 40% ET out/in (mbar)**	**Cascade in (mbar)**
R2017	10,4	3,5	90	1,3/2	1,5/7,5
R2022	10,4	3,5	90	1,3/2	1,5/7,5
R2028	10,4	3,5	90	1,3/2	1,5/7,5
R2034	10,4	3,5	90	1,3/2	1,5/7,5
R2041	10,4	3,5	90	1,3/2	1,5/7,5
R2048	10,4	3,5	90	1,3/2	1,5/7,5
R2056	9,5	3,0	90	1,3/2	1,5/7,5
R2066	9,5	3,0	90	1,3/2	1,5/7,5
R2077	9,5	3,0	90	1,3/2	1,5/7,5
R2090	9,5	3,0	90	1,3/2	1,5/7,5
R2105	9,5	3,0	90	1,3/2	1,5/7,5
R2122	9,5	3,0	90	1,3/2	1,5/7,5

Table 8a Burner pressure natural gas

Liquid Propane Gas Gas service pressure 50 mbar Nozzle diameter 1 mm					
minimum load (20 %)					
Type	**Burner pressure start/min. (mbar)**	**Pilot pressure (mbar)**	**Air damper opening closed (mm)**	**Burner pressure 40% ET out (mbar)**	**Cascade out (mbar)**
R2017	5/2	11	8	13/18	6/28
R2022	5/2	11	8	13/18	6/28
R2028	5/2	11	8	13/18	6/28
R2034	5/2	11	8	13/18	6/28
R2041	5/2	11	8	13/18	6/28
R2048	5/2	11	8	13/18	6/28
R2056	5/2	11	8	13/18	6/28
R2066	5/2	11	8	13/18	6/28
R2077	5/2	11	8	13/18	6/28
R2090	5/2	11	8	13/18	6/28
R2105	5/2	11	8	13/18	6/28
R2122	5/2	11	8	13/18	6/28
full load (100 %)					
Type	**Burner pressure (mbar)**	**Pilot pressure (mbar)**	**Air damper opening open (mm)**	**Burner pressure 40% ET out (mbar)**	**Cascade in (mbar)**
R2017	40	11	90	13/18	6/28
R2022	40	11	90	13/18	6/28
R2028	40	11	90	13/18	6/28
R2034	40	11	90	13/18	6/28
R2041	40	11	90	13/18	6/28
R2048	40	11	90	13/18	6/28
R2056	40	11	90	13/18	6/28
R2066	40	11	90	13/18	6/28
R2077	40	11	90	13/18	6/28
R2090	40	11	90	13/18	6/28
R2105	40	11	90	13/18	6/28
R2122	40	11	90	13/18	6/28

Table 8b Burner pressure propane

6.2 Pre-lighting checks and dry run

The following is a list of appliance checks to be carried out.

6.2.1 Check 1

With the boiler gas inlet service cock closed and electricity supply switched off

I) Ascertain from the gas supplier or the customer that the meter installation is operational.
II) Ensure that the gas installation pipework up to and including the gas inlet service cock has been tested for gas soundness in accordance with IM/5 or BS 6891 as appropriate.
III) Ensure that the gas installation pipework to the gas inlet service cock has been purged in accordance with IM/2 or BS 6891 as appropriate.
IV) Check that all electrical supplies are isolated.
V) Check electrical earth continuity between the boiler gas pipework and the mains supply.
VI) Check the electrical components are of the correct voltage range, particularly low voltage ancillary controls.
VII) Check the pump motor current and adjust the starter overload settings.
VIII) Fill and vent the water system and check for leaks.

6.2.2 Check 2

With the boiler gas inlet service cock closed, electrical supply switched on but on/off switch on boiler control panel switched on.

I) Check that the direction of rotation of the pump(s) is correct.
II) Check the correct operation of the water fl ow switch lamp on the control panel as the pumps are turned on and off.

Components within the connection box

(Cover panel removed by removing the two screws at top of panel and lifting panel off the bottom locating pegs).

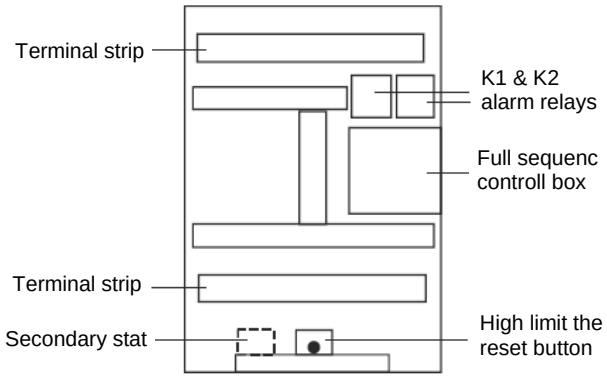

Fig. 19 Connection box

Burner trolley assembly

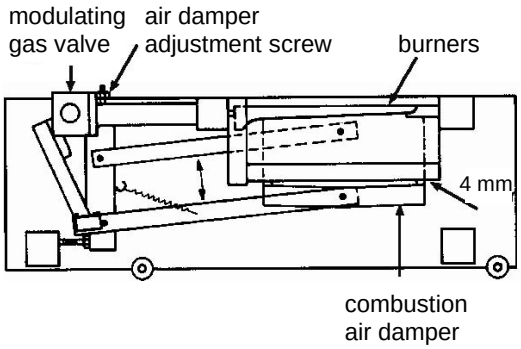

Fig. 20 Burner trolly assembly

III) Check the setting of the modulating combustion air damper situated underneath the burners, there should be a gap of 4 mm (Natural gas) or 8 mm (LPG) with the damper in the fully closed position against the stops.

IV) Check the operation and interlocking of any air inlet and extraction fans (when applicable).

V) Check the correct connection and operation of any external controls.

VI) With the control thermostat on a high setting turn on the on/off switch at the boiler control panel, check that the combustion air inlet damper cycles open and then closes, that there is a spark at the ignition electrode, that the pilot safety shut off valve is heard to be opening and that the boiler goes to lockout in approximately 5 secs later as there is no gas.

6.2.3 Check 3

With the electricity supply switched off check the gas train downstream of the gas inlet service cock as follows:
Refer to Gas trains, fig. 28 for particular boiler model.

1. Ensure that gas service cock and pilot manual cock are closed.
2. Connect a pressure gauge to test point 10/1 and open test point 10/2.
3. Open and then close the gas service cock to pressurise up to the 1st safety shut off valve.
4. Allow 1 min. for temperature stabilisation and then check for any loss of pressure during the next 2 mins.
5. If there is a pressure loss the pipework up stream of the 1st safety shut off valve should be checked with a suitable leak detection fl uid with the gas service cock open.
6. If no leak is found, this indicates that the 1st safety shut off valve is letting by and should be replaced (whole multi block on models R2017 and R2022).
7. With test points 10/1 and 10/2 opened connect them together with a short piece of fl exible tubing which incorporates a tee connection to the pressure gauge.
8. Open and close the gas service cock to pressurise up to the 2nd safety shut off valve.
9. Allow 1 min. for temperature stabilisation and then check for any loss of pressure at the gauge during the next 2 minutes.
10. If there is a pressure loss the pipework between the 1st and 2nd safety shut off valve should be checked with a suitable leak detection fl uid with the gas service cock open. (Not applicable to models R2017 and R2022).
11. If no leak is found this indicates that the 2nd safety shut off valve is letting by and should be replaced (whole multi block on models R2017 and R2022).

6.3 Live run check

a) Disconnect the electrical connections to the 1st safety shut off valves by removing the plug from the front electrical panel. (valve 4a fig. 29).
Open the gas service cock and pilot manual cock and with the control thermostat on a high setting turn on the electrical supply and the on/off switch on the front control panel.
Check that the combustion air inlet damper cycles to the fully open position and back before ignition of the pilot burner commences.
Using the sight glass at the lower right hand side of the boiler check that the ignition electrode ignites the pilot burner and that the pilot burner is stable in operation.

b) Disconnect the electrical connection to the 2nd safety shut off valve by removing the electrical connector from the front, electrical tray.
Check that the boiler goes to lockout approximately 5 secs later and that the pilot burner is extinguished. (It may be necessary to purge the ignition system if there is air in the gas supply; although seven minutes must be allowed between each attempt to ensure that any gas has been dispersed from the combustion chamber).
Press reset button to override boiler lockout the pilot pipe and connections from the pilot manual cock to the burner connection or gas sound.

c) Connect a pressure gauge to pressure test point 10/3 (see gas train fig. 28) and carry out a) above.
Check that pilot burner pressure is as indicated in table 8a or 8b, with the pilot burner on test the pilot pipe and connections to the burner.

d) Connect a pressure gauge to the main burner manifold, test point 10/4 and re-connect the electrical connections from the main safety shut off valves into the front electrical panel.
Switch the on/off switch to on and the boiler will ignite in the sequence described in a) above with the main burners igniting from the pilot burner at minimum rate.
Check ignition of the main burners is smooth. Observe that the modulating air damper opens and the gas rate increases to maximum. Check the main burner pressure on maximum is as indicated in table 8a or 8b and adjust if necessary.
Check all pipework and connections downstream of the safety shut off valves for gas leaks with a suitable leak detection fl uid.
Switch off the boiler, remove pressure gauge and close the test point.

⚠ e) Remove the RH upper side panel and within the control panel remove the test link for the flame detection (see wiring diagram) and connect a A-meter (0 - 50 A =) in series with the flame detection circuit (see fig. 21). While measuring ionisation the main burner should stay switched off.
To do this, disconnect the main gas valve by breaking the electrical connection by removing the plug (4a). Remove the ionisation plug (5). Connect the black wire (-) (A) of the A-meter with the lowest contact in the plug (B) (see fig. 21). Connect the red wire (+) (C) of the A-meter with the lowest contact in the ionisation socket (D). The ionisation of the pilot burner must show a minimum of 5 A during 10 seconds after which the burner falls into flame detection lockout. Wire the main gas valve back to its originally conditions. Repeat the test by starting the boiler to maximum operation. Check that the A-meter reads at least 5 A after 10 seconds.

f) With the gas train cover closed switch on the boiler. Check for spillage of products of combustion from the draught diverter opening with a smoke detector or other suitable apparatus, ensuring that any openable windows, doors etc., fitted in the boiler space are shut and any extraction fans are operating. Spillage checks should be done with the boiler cold and when the system has heated up, both on maximum and minimum rates.

g) Re-check the main burner pressure at maximum and by modulating the damper down also check the main burner pressure at minimum against that indicated in table 8a or 8b, adjust if necessary at the main burner governor. Check this against a gas rate reading at the installation gas meter.

h) Check the operation of the water flow switch by gradu ally closing down one of the boiler isolating valves. The boiler should go to lock-out.

i) Check that the pump overrun is operating correctly when the boiler is switched off and that any time controls are operational.

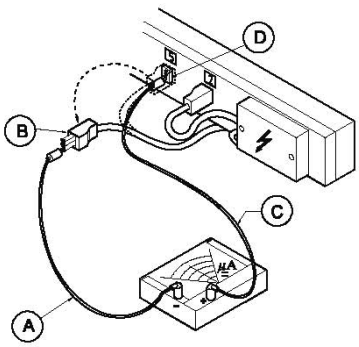

Fig. 21 Measuring ionisation

6.4 Instructions to user

Upon satisfactory completion of commissioning hand the **Technical documentation** to the person responsible for the plant and explain the method of safe operation. Ensure that he/she is fully conversant with the starting, shut down, general operation and emergency shut down procedures. Explain the operation of the overheat control, by pressing button in right hand upper side panel, but stress that in case of repeated overheating of the boiler that the fault should be corrected by a competent person. Stress the importance of regular servicing for safe and efficient operation and that if a gas leak is detected to turn off the boiler at the gas service cock and to call the local gas supplier.

Boiler failure
In case of boiler failure the system will fall into lock-out. Reset the boiler with the reset button on the control panel. Repeat this several times if necessary. If the boiler still does not start, refer to chapter ‘Operation and fault finding’ (7).

7 Operation and fault indication

7.1 Function

The boiler starts up in the sequence described below: Heat demand. Ignition of pilot flame. As soon as pilot flame is detected, an ionisation current will pass to the flame safeguard control box. The main gas valve opens and gas ignites over complete burner tray. Main burner flame is detected by a sensing electrode. The modulating control will commence from low fire condition.

7.2 Regulation

The burner (input) is controlled through a butterfly valve and modulates between 20% and 100% heat demand. If the heat demand is smaller than 20%, the burner will remain off. The temperature is controlled through an electronic PID regulator (EM- or EW-version).

7.3 Control panel

To assist with fault finding the control panels incorporate a number of warning indicators and switches.

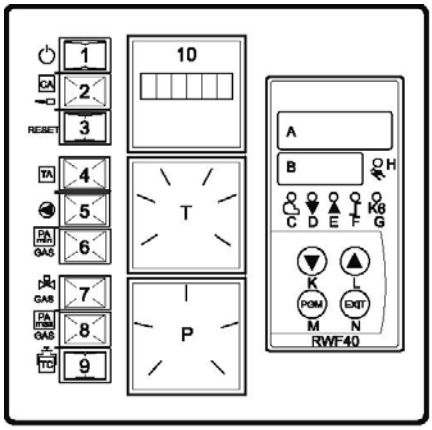

Fig. 22 Control panel electronic modulating version (version EM)

RWF40
A Process value (actual temperature)
B Set point (temperature)
C Burner enable (not applicable)
D Mod. indicator (decrease fire rate)
E Mod. indicator (increase fire rate)
F Two-stage firing (not applicable)
G Limit comparator
H Manual operation
The keys K-L-M-N are used for displaying values and changing parameters in the temperature controllers configuration.
K Down key (reduce value)
L Up key (increase value)
M Programme key
N Exit key

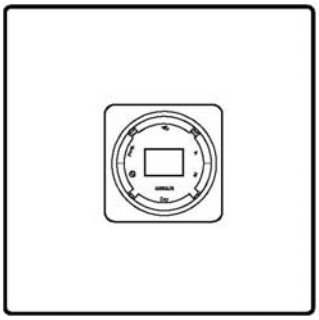

Fig. 23 Additional control panel to the EM version with weather compensation including clock for night-time temperature reduction

7.4 Fault indications

If there is **insufficient water flow** the boiler will turn off and lock- out. Red lamps 2 and 5 on.
Reset by pushing button 3

If the flow temperature exceeds the **high limit** setting, the boiler will mechanically lock out and red lamp 2 illuminates. Reset by pushing button 3 and allow the unit to fire. If lamp 4 TA then illuminates, reset button in high limit thermostat. Remove the two screws at the top of the upper right hand panel. Remove the panel by lifting up. Remove the high limit thermostat cap nut (see sticker high limit thermostat) with a 17 mm ring spanner. (See fig. 19)
Press a screwdriver against the green peg until a light click is heard. Lamp 4 turns off.
Refit capnut. Refi tupper right hand panel and fasten the two top screws. Then press button 3 to reset red lamp 2 (CA).

If an ionisation interruption occurs, red lamp 2 will light, burner will be off.
Reset by pushing reset button 3.

The pilot flame on the main burner can be observed through the sight glass on the lower right hand side of the boiler (see pos. 12, fig. 2).

7.5 Start-up

Ensure that gas and electric supplies are connected. Start sequence:

A Turn manual gas cock open
B Turn the pumps on
C Ensure that all hot water outlets are closed
D Turn the supply voltage to the boiler on and turn the boiler on using the power switch 1
E In case of failure, observe type of failure, take necessary steps to rectify, refer to section 4 for details
F Set temperature regulator as required.

7.6 Shut-down

A To turn off for short periods switch boiler off by using the power switch 1
B For long periods switch the pump off and after 6 minutes close the main gas cock and main electrical supply.

7.7 Warnings

Non operation of boiler during the winter time can cause freezing. By draining the water out of the heat exchanger, using the drain taps mounted on the under-side of the flow and return header manifold. Damage to boiler will then be avoided.

WARNING
In case of failure obtain assistance from a qualifi ed CORGI gas/heating engineer.
Don’t repair yourself.

7.8 Fault finding table

Fault	Possible cause	Solution
Boiler does not attempt to light	No electrical supply to boiler	Check whether switched indicator (1) is alight Check all external controls for continuity
	No heat demand	Check control thermostat is set high enough
	Overheat control has operated	If lamp 2 is illuminated, press reset button and allow unit to fire. If lamp 4 then illuminates, reset button in high limit thermostat (see 7.4)
	Insufficient water flow indicator (5) alight	Check water system
	Control panel fuse blown	Check fuse
	Faulty control box	Change box
Air modulating damper cycles, no ignition spark and boiler then goes to lockout, indicator (2) alights	HT lead disconnected or faulty	correct
	Ignition electrode incorrectly set or faulty	check setting or replace
	Faulty ignition generator	change
	Faulty control box	change box
Ignition sparks, pilot burner does not light and boiler then goes to lock-out indicator (2) alights	Gas supply turned off	Turn on
	Air in gas line	Purge air
	Check ionisation probe	If damaged, replace
	Faulty pilot safety shut off valve or connections	Rectify
	Pilot injector blocked	Clean
	Pilot governor set too low	Adjust

Fault	Possible cause	Solution
Pilot burner ignites but boiler then goes to lock-out, indicator (2) alights. Main burners do not light	Check flame probe	If damaged, replace
	Flame probe lead(s) not connected or faulty	Rectify
	Faulty connections to main safety shut off valve(s)	Rectify
	Faulty main safety shut off valves	Change valves
	Faulty control box Check ionisation current, as per instructions	Replace
Boiler operates but then goes to overheat indicator (4) alights	Fault in water system	Rectify
	Main burner pressure set too high	Reset
	Pump overrun inoperative	Rectify
	Boiler does not shut down	Min. fire is set too high, reset servomotor.

8 Maintenance

8.1 Safety

Always wear the proper protective clothing and shoes when servicing the boiler.
Wearing jewelry and loose clothing can contribute to unsafe situations.

8.2 General information

In order to keep the R2000 in a safe working condition, the boiler should be inspected and serviced at least once every year and cleaned if necessary.

⚠ ***Frost protection***
When boiler is not in operation for a long period of time, the heat exchanger should be protected against frost. This can be achieved by draining water from the heat exchanger.

8.3 Inspection

Inspecting the draught diverter
Remove the inner and outer access panels on the draught diverter to allow internal inspection of the draught diverter and flue baffles.

Heat exchanger (external inspection)
As you inspect the inside of the draught diverter, the top of the heat exchanger can also be inspected. Check for dirt and sooting. For cleaning the heat exchanger, refer to chapter “Cleaning”.
After removing the burner, the combustion chamber and the underside of the heat exchanger can easily be inspected by using a mirror for example.

Heat exchanger (internal inspection)
Internal inspection must be carried out by qualified and authorised personnel.

Sight glass
A sight glass can be found on the right hand side of the burner assembly for inspection of:
- boiler ignition
- combustion
- pilot flame.

Burner tray
The burner manifold and the gas regulator are connected by means of a coupling.

⚠ Remove the burner for inspection as follows:
1 Close the gas service cock and disconnect the burner manifold and gas regulator
2 Release the two brackets which attach the burner to the boiler frame.
3 Disconnect the spark plug, ionisation caps, servo-motor plugs and solenoid value plugs and remove the ‘earth’ lead.
4 Carefully withdraw the burner from the boiler unit. Inspect for dirt and clean the burner bars if necessary.

8.4 Cleaning

Before using chemicals and cleaning agents in the boiler, please contact your supplier for advise.

Always read the instructions on the bottle of the cleaning agents before using them.

Heat exchanger (external cleaning)
Remove the baffles before cleaning the heat exchanger.
- Use compressed air when the heat exchanger is lightly soiled
- Use a stiff brush and soap when the heat exchanger is very dirty, do not allow the refractory brick-work to get wet.

NB.
The heat exchanger may become heavily soiled (soot for example), when the instructions are not followed properly.

This may be caused by:
- insufficient ventilation
- condensate on the heat exchanger.

If this is the case, clean the complete heat exchanger, including the baffles.
Furthermore, the cause of the problem should be ascertained and rectified.

Heat exchanger (internal cleaning)
Descale the heat exchanger with suitable chemicals.

Filter inspection
When the pressure loss over the gas regulator gets too high, the burner pressure will decrease noticeably.
A dirty gas filter may be the cause. The filter should be inspected at least once every year.
To allow access to the filter element, first remove the side cover of the gas regulator assembly.
Then remove the filter and replace it if necessary. Replace the cover and check for leaks.

8.5 Servicing

WARNING: ONLY COMPETENT PERSONS SHOULD CARRY OUT SERVICING ON THIS BOILER IN ACCORDANCE WITH THE GAS SAFETY (INSTALLATION AND USE) REGULATIONS 1984.

Ensure that both gas and electrical supplies are switched off before carrying out any service operation.
After carrying out any service operation it is important to check for gas soundness and re-commission the boiler as described in Section 6 - Commissioning.
Ensure that any panels covering live connections are replaced securely upon completing any service operation. Wiring diagrams and components lists are supplied separately.

Routine maintenance
The frequency of routine maintenance depends on the use and environment in which the boiler is used although it must be carried out at least annually.

The scope of routine maintenance includes the following:

I	Cleaning the heat exchanger
II	Cleaning the burner assembly and inspect the condition of the burner and ignition components
III	Checking the gas train for soundness
IV	Inspecting the adjustment of the air damper and operation of the modulating gas valve and servo-motor
V	Checking the effectiveness of natural or mechanical ventilation
VI	Inspecting the flue system including terminal, for damage and ensure it is evacuating the products of combustion without any leakage or spillage
VII	Check gas pressure settings, safety lock-out systems and water flow switch
VIII	Inspect condition of refractory lining.

Procedure

Release the fixings securing the gas train cover at the front of the boiler and remove carefully in the upward direction. Disconnect all the plugs from the front electrical panel and release the quick clamps at either side of the burner trolley. The burner trolley can now be withdrawn from underneath the boiler. Release the fixing screw at the top of the right hand upper side panel covering the electrical controls. Both the right hand and left hand upper side panels can now be removed by lifting upwards and off their lower locating pegs. The front and rear upper panel can also now removed by lifting upwards off the locating pegs exposing the down draught diverter and the top of the heat exchanger.

Boiler with burner trolley removed

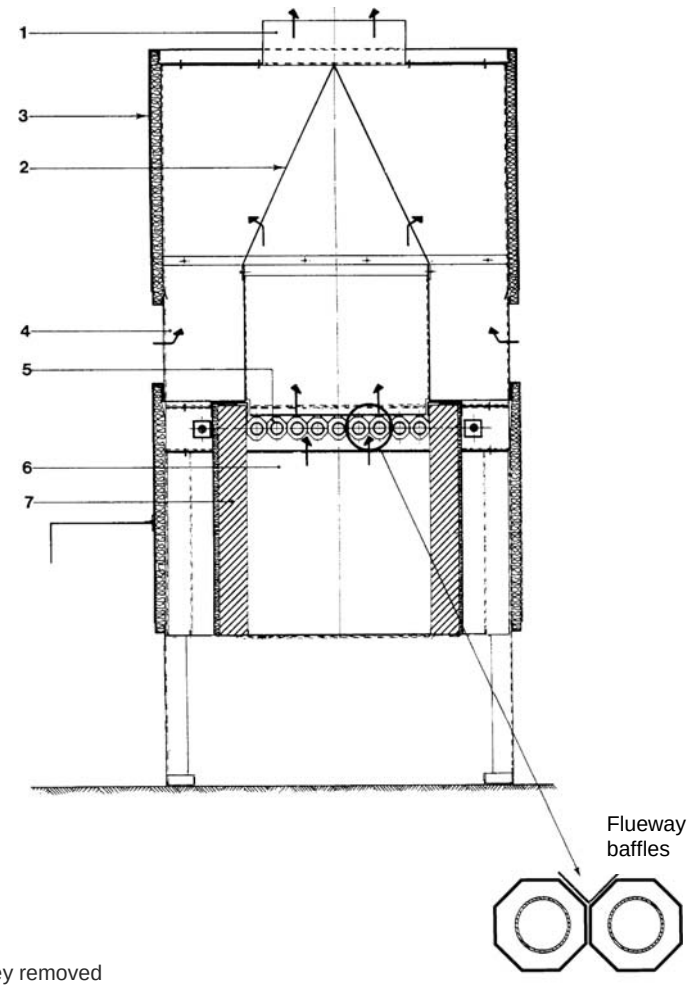

Fig. 24 R2000 with burner trolley removed

1 Flue outlet socket
2 Down draught diverter
3 Front and rear upper panels
4 Draught diverter air supply opening
5 Boiler heat exchanger
6 Combustion chamber
7 Combustion chamber insulation

Remove the down draught diverter by releasing two screws in either side and remove the fl ueway baffles from the top of the heat exchanger. Inspect the heat exchanger for deposits and clean if necessary, check condition of the copper fin tubes and fins and replace flueway baffl es.
Check the condition of the boiler for any possible corrosion damage. Also check the condition of the combustion chamber insulation panels, replacing if necessary.
With the burner trolley removed each individual burner bar can be removed and cleaned. With the exception of the right hand burner bar, this is done by first removing the insulation covered stainless steel channels, located at the front and rear of the burner assembly, and then removing the burner bar by first lifting the end of the burner out of its locating notch and then withdrawing the burner from its injector (avoid damaging the electrodes when removing the pilot burner assembly).

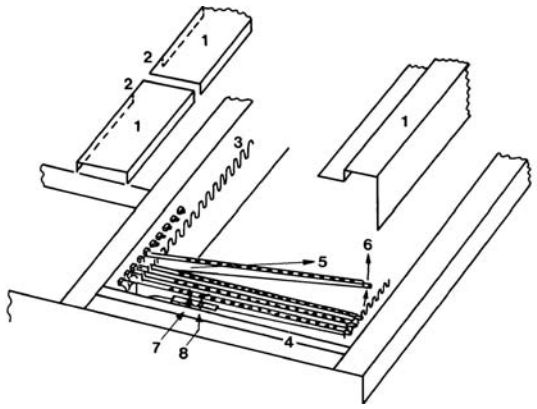

1 Insulation covered stainless steel channels
2 Notches to go over gas inlet pipe
3 Burner location tabs
4 Burner assembly frame
5 Withdrawal direction from holder and injector
6 Lift burner out of notch at end
7 Ignition electrode
8 Sensing electrode

Fig. 25 Burner assembly

Each burner bar can be withdrawn from its injector.
With the burners removed check the injectors for any blockage and if necessary clean in spirit.
Remove the air guides located beneath the burners and clean. Check the setting of the modulating combustion air damper. See fig. 20, there should be **a gap of 4 mm with the damper in the fully closed position against the stops.**

Check the condition of the ignition and sensing electrode at the right hand end of the burner assembly.
There should be no burning of the metal tip and the ceramic should not be cracked.
Replace the burners starting with the pilot burner. Ensure that the shaped venturi end at each burner locates properly over the injector and that the tab at the end of the burner bar locates fully in its notch.
The two right hand burners have handed tabs to ensure that they are fi tted in the correct position as they have cross lighting parts.
Ensure that the insulation covered stainless steel channels are correctly positioned as they guarantee the correct location of the burners. The front tip of the channels locates over the burner location tabs, see Fig. 25.
Ensure that the ignition and sensing electrodes are correctly positioned as shown in Fig. 26.
If the position or gaps are not correct the electrodes must not be bent. In that case the electrodes have to be replaced.

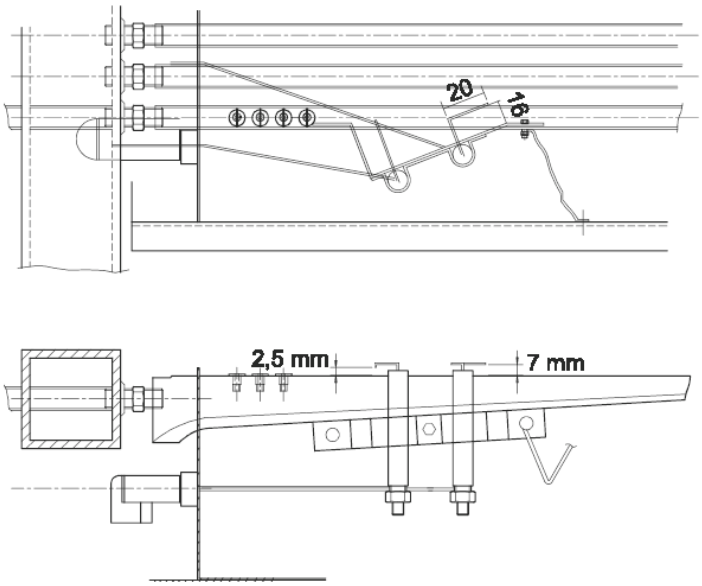

Fig. 26 Electrodes

Check that the modulating combustion air/gas control linkages are in good working order and that there is no play in the gas control spindle.
Replace the various panels on the top of the boiler including the down draught diverter, replace the burner trolley and clamp into position. Re-connect the electrical connectors to the connection box.
Re-commission the boiler as described in Section 6 commissioning.

Gas trains

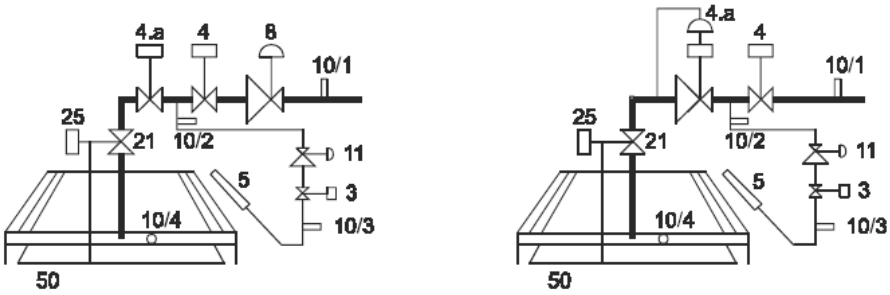

Type: 17 - 77

Type: 90 - 122

Fig. 27 Gas train

8.6 Component replacement

Electrodes
Remove the burner trolley as described earlier. Remove the insulation covered stainless steel channels and each burner as described at burner bars. Remove the air guide assembly(s) which are located under the burner bars and ensure the spark electrode is disconnected from the ignition generator. Remove the burner assembly frame complete from its location in the burner trolley.
The ignition and sensing electrodes can now be replaced by removing two security screws and nuts which attach each electrode to the burner assembly frame.
When re-assembling ensure that the electrodes are correctly replaced with the burner bars in position. See that the insulation covered channels are correctly located. Replace components in the reverse order of removal. Check operation of electrodes by carrying out the relevant parts of section 6, commissioning.

Burner bars
Remove the burner trolley as described earlier. Remove the insulation covered stainless steel channels. With the exception of the pilot burner bar, the burner bars are removed by first lifting the end of the burner out of its locating notch and then withdrawing the burner from its injector.
To remove the pilot burner assembly, disconnect the wiring to the sensing electrode and the ignition electrode. Avoid damaging the electrodes. Replacement of the burner bars is described in section Servicing. Ensure the burners are not damaged or warped.

Injectors
Remove the burner trolley and burner bars as described before. With the burner bars removed the injectors can be unscrewed from the gas manifold.
Ensure that injectors are unblocked and are the correct size - 1.8 mm diameter (natural gas).
Use an approved pipe sealant on the injector thread to ensure a gas sound seal.
Replace components in the reverse order of removal.

Gas train
(including gas train components).
Release the fi xings securing the top of the gas train cover at the front of the boiler and remove carefully in upward direction. Ensure that the gas service cock is closed, release the gas union, disconnect the plugs from the front electrical panel and release the quick clamps at either side of the burner trolley and withdraw the burner trolley.
Solenoid valve heads can be replaced with valve in situ by releasing the appropriate fixing on the valve head. Ensure that the new valve head is wired in accordance with the separate supplied wiring diagrams.

The main gas train is removed as follows:
Loosen the grub screw securing the keyed shaft of the modulating valve servomotor to its coupling and remove the motor by unscrewing two fixing screws. It is not necessary to remove the gas train if only replacing this component. Remove the pin connecting the modulating air damper to its actuating arm at the modulating valve by releasing the clip.
Remove the copper pilot supply pipe by releasing the union nut at each end. Unscrew the four screws that secure the modulating valve to its flange connection on the gas manifold being careful not to loose the “O” ring, and withdraw the gas train to the left out from its locating slot in the burner trolley, the various controls in the main gas train can now be replaced by unscrewing from the gas train.
The pilot solenoid valve can also be unscrewed at its outlet connection and replaced.
An approved thread sealant should be used when re-connecting any pipe threads. Ensure that any controls replaced are fitted squarely on the gas train, the “O” ring seal on the outlet of the modulating valve is in good condition and correctly located and the modulating valve drive shaft and linkages are correctly assembled.

Upon replacement if components carry out the relevant portions of section 6 commissioning.

Ignition generator
Release the two fixings securing the top of the gas train cover at the front of the boiler and remove carefully in upward direction.
Disconnect all of the plugs from the front electrical panel and remove the cover of the electrical panel by releasing two screws at each end. Disconnect the ignition generator electrical connection from within the control panel and release the ignition electrode lead from the generator. Replace the generator by releasing its screw fitting and reconnect the electrical connections in accordance with the separate supplied wiring diagrams.

Control panel components
Release the two fixing screws at the top of the right hand upper side panel and remove the panel by lifting upwards and off its lower locating pegs.
Refer to fig. 19 for the locations of the various controls. Replace components by removing electrical connections and screw fixings. It is necessary to drain the boiler when replacing the water flow switch as it incorporates water connections.
The temperature sensing phials for both the control thermostat and the overheat control are contained within a thermostat pocket in the flow header immediately beneath the control panel. The phials are released by first removing the securing clip.
The control thermostat is fixed to the front right hand side panel of the boiler and its fixing screws can be accessed via the control panel.
Re-connect any electrical connections in accordance with the separate supplied wiring diagrams.

Replacing fin tubes
Header and manifold removal
Release water pressure and drain the unit.
Disconnect the system water-pipes at the manifold flanges.
Disconnect all pressure and temperature sensors from the flow/return header and electrically disconnect the flow-switch.
Remove the heat exchanger tensioning bars. Carefully remove the water manifold and flow/return header (2P and 3P).

Fin tube replacement
Remove the unit's 18 O-rings.
From the top of the heat exchanger remove two baffles, one on either side of the damaged finned-tube.
On the side of the unit with the best access, remove the 4 bolts which attach the finned-tube mounting-plate (6) the unit's frame. This will allow partial withdrawal of the finned-tube mounting plate. Insert the 9 special tools into the finned-tubes on this side of the unit.
Gently withdraw the finned-tube mounting plate (6) about 3" and remove the special tool from the damaged fin tube. It should now be possible to remove this finned-tube from within the unit while the remaining tubes remain in position. During this operation the finned-tube mounting plate at the other end of the unit need not be moved.
Fit the replacement finned-tube, the special tool and slide the finned-tube mounting plate back into position and remove the special tools. Refit and secure the two heat exchanger baffles.

Inspection of the headers and the fin-tube mounting plate mating surfaces
Inspect the mating surfaces of the water header, flow/return manifolds and the fin-tube mounting plate. These should be clean, smooth and undamaged.

O-ring replacement
Fit new O-rings to all finned-tubes (article No. ARO020).

Fitting and retensioning the water heater and flow/return manifold
This is a reversal of the removal procedure.

NOTE It is very important that the tensioning bars are correctly tensioned. This is done by measuring the compression of the tensioning washers. The compression varies depending on unit type. The table and figure on the next page should clarify this.

Washer dimension X	
R2017 - R2034	14,0 mm
R2041 - R2056	21,0 mm
R2066 - R2077	28,5 mm
R2090 - R2122	42,5 mm

Table 9 Springwasher dimension

Upper dimensions are in pressed state wich are appr. 70 % of the unpressed state.

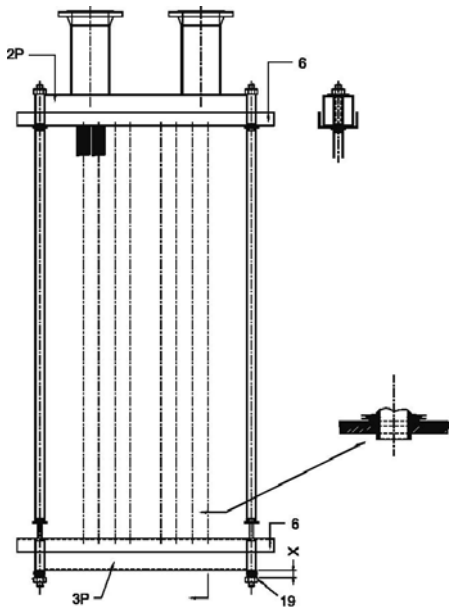

Fig. 28 Fin tube replacing

8.7 Service

For service and maintenance the service department of your supplier can be contacted.

Notes

Notes

Service:

Rendamax bv

Hamstraat 76
6465 AG Kerkrade
Parkstad nr. 5007

P.O. Box 1035
6460 BA Kerkrade
The Netherlands

Tel. (+31) 45 5669 900
Fax (+31) 45 5669 910